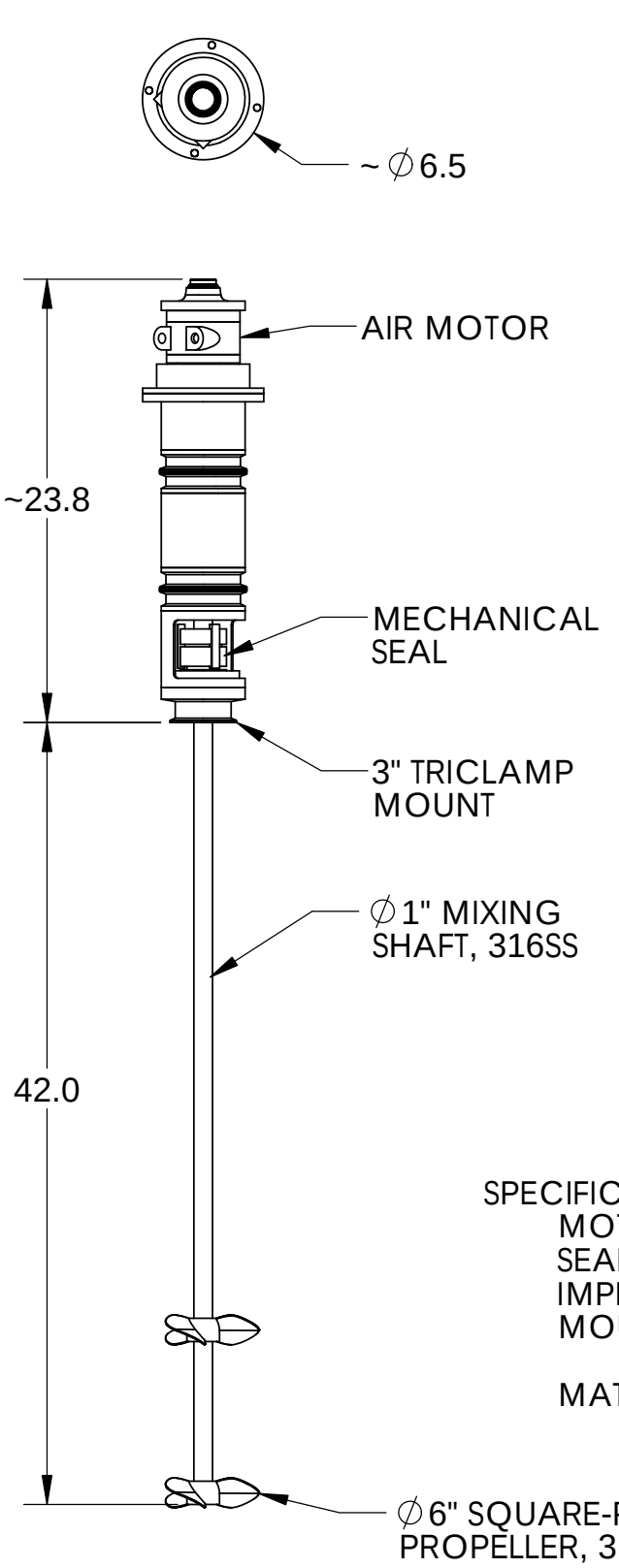

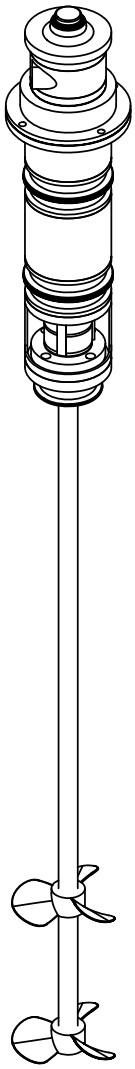

SPECIFICATIONS:

MOTOR: 4HP AIR, 300-3000RPM.
SEAL: EXTERNALLY-MOUNTED DRY-RUNNING.
IMPELLER: ∅6" SQUARE-PITCH PROPELLERS.
MOUNT: 3" TRICLAMP. OTHER SIZES/TYPES AVAILABLE UPON REQUEST.
MATERIALS: 316SS WETTED PARTS

PROPRIETARY AND CONFIDENTIAL

THE INFORMATION CONTAINED IN THIS DRAWING IS THE SOLE PROPERTY OF INDCO INCORPORATED. ANY REPRODUCTION IN PART OR AS A WHOLE WITHOUT THE WRITTEN PERMISSION OF INDCO INCORPORATED IS PROHIBITED.

NEXT ASSY	USED ON
APPLICATION	

DIMENSIONS ARE IN INCHES
TOLERANCES:
FRACTIONAL±
ANGULAR: MACH± BEND ±
TWO PLACE DECIMAL ±
THREE PLACE DECIMAL ±

MATERIAL

FINISH

DO NOT SCALE DRAWING

	NAME	DATE
DRAWN	MH	9/20/11
CHECKED		
ENG APPR.		
MFG APPR.		
Q.A.		

COMMENTS:

PhD-400A MIXER
GENERAL ARRANGEMENT

SIZE	DWG. NO.	REV.
A	31Q2005 - PhD-400A	0

SCALE:1:16 WEIGHT: SHEET 1 OF 1